# Threaded inserts reinforced internal thread, self-locking

## Item description/product images

## Description

**Material:**
Threaded insert in stainless steel.

**Version:**
Passivated.

**Note:**
Reinforced threaded inserts allow threaded holes which have been damaged, torn out or jammed to be used again or to be repaired. This makes it possible to recover scrap and rejects of expensive products.
Reinforced threaded inserts are suitable for use in various materials, including light metals and casting.
Inserts with internal threads larger than M6 are supplied with four locking pins instead of two.
Permissible deviations:
The medium tolerance class applies to the threads listed, i.e. 6H for nut threads and 6g for bolt threads. Other dimensions ±0.25 mm.

Technical information see operating instructions for threaded inserts.

**Advantages:**
- Quick and easy installation.
- The insert is fixed with pins in order to prevent torsion due to twisting or vibrations.
- No other special tools are required besides the assembly tool.

**Drawing reference:**
1) locking pin
2) self-locking part of internal thread

## Drawings

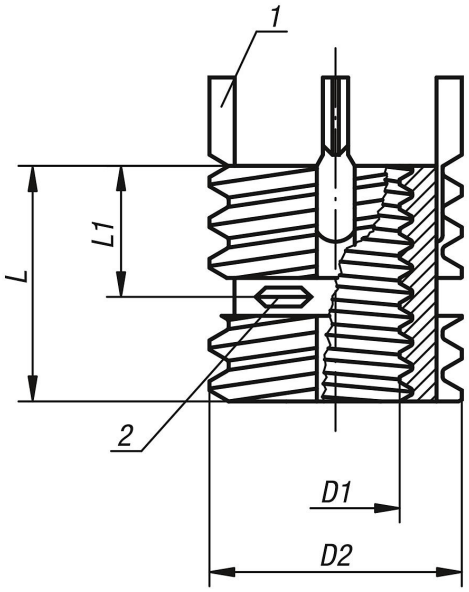

# Threaded inserts reinforced internal thread, self-locking

## Overview of items

### Threaded inserts reinforced with internal thread, self-locking and assembly tools

| Order No. | D1 internal thread | D2 external thread | L1 length | L length | Core drill Ø | Counter-sink Ø +0.25 | Tap size | Min. thread depth | Removal drill Ø | Removal drilling depth | Order No. assembly tools |
|---|---|---|---|---|---|---|---|---|---|---|---|
| **K0402.104** | M4 | M8 | 4 | 8 | 6,9 | 8,3 | M8 | 9,5 | 5,5 | 4 | K0399.804 |
| **K0402.105** | M5 | M10x1,25 | 5 | 10 | 8,8 | 10,3 | M10x1,25 | 12,5 | 7,5 | 4,8 | K0399.805 |
| **K0402.106** | M6 | M12x1,25 | 6 | 12 | 10,8 | 12,3 | M12x1,25 | 14,5 | 9,5 | 4,8 | K0399.806 |
| **K0402.108** | M8 | M14x1,5 | 7 | 14 | 12,8 | 14,3 | M14x1,5 | 16,5 | 11,5 | 4,8 | K0399.808 |
| **K0402.110** | M10 | M16x1,5 | 8 | 16 | 14,8 | 16,3 | M16x1,5 | 18,5 | 13,5 | 4,8 | K0399.810 |
| **K0402.112** | M12 | M18x1,5 | 9 | 18 | 16,8 | 18,3 | M18x1,5 | 20,5 | 15,5 | 4,8 | K0399.812 |
| **K0402.114** | M14 | M20x1,5 | 10 | 20 | 18,8 | 20,3 | M20x1,5 | 22,5 | 17,5 | 4,8 | K0399.814 |
| **K0402.116** | M16 | M22x1,5 | 11 | 22 | 20,7 | 22,3 | M22x1,5 | 24,5 | 17,8 | 6,4 | K0399.816 |
| **K0402.116X15** | M16x1,5 | M22x1,5 | 11 | 22 | 20,7 | 22,3 | M22x1,5 | 24,5 | 17,8 | 6,4 | K0399.816 |
| **K0402.118X15** | M18x1,5 | M24x1,5 | 12 | 24 | 22,5 | 24,3 | M24x1,5 | 26,5 | 19,8 | 6,4 | K0399.818 |
| **K0402.120** | M20 | M30x2 | 15 | 30 | 28 | 30,3 | M30x2 | 34,5 | 25,8 | 6,4 | K0399.820 |

© HEINRICH KIPP WERK GmbH & Co. KG