Opening grips

Item description/product images

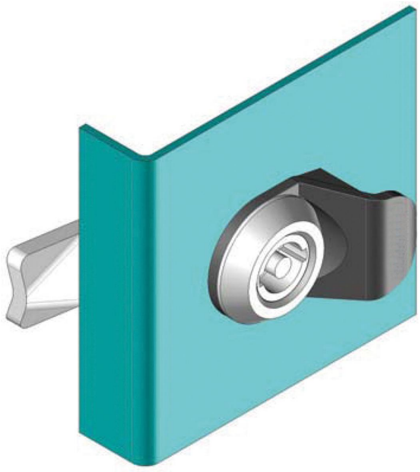

Description

Material:
Thermoplastic plastic (PA).

Version:
Black.

Note:
Practical opening grip for compression latches with a head diameter up to max. 30 mm. If the opening grip is used, dimension “A” of the compression latch is reduced by 2.5 mm.

Drawings

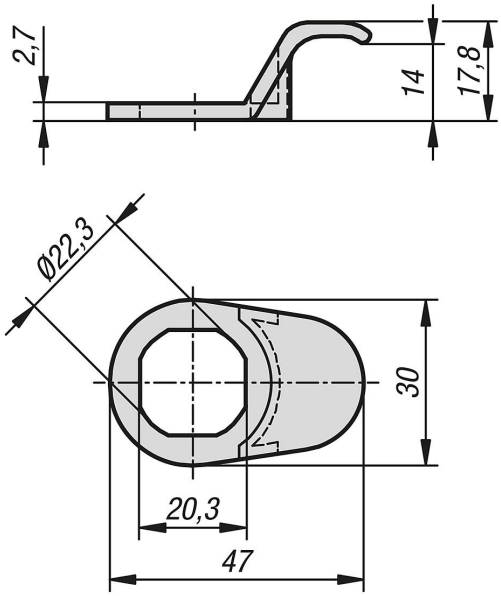

Overview of items

Opening grips

Overview of items

© HEINRICH KIPP WERK GmbH & Co. KG