Clamping force intensifiers

Item description/product images

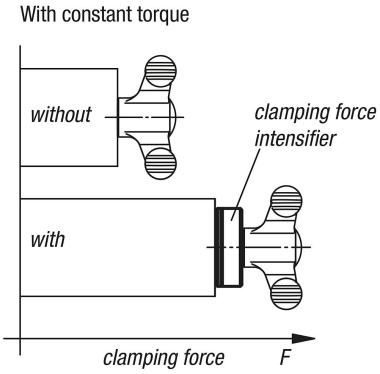

Description

Material:
Bearing housing steel.

Version:
Black oxidised.

Note:
As a rule, the clamping force intensifier is used together with tightening or clamping elements. The integrated axial needle roller thrust bearing unit can achieve ca. twice the clamping force by the same lever length.

Advantages:
The component surface is protected by the stationary lower ring.
The higher preload force causes a lower tendency for material relaxation in the thread.

Clamping levers, wing and star grips, knurled knobs or hexagonal and socket head screws etc. can be used as tightening or clamping elements.

© HEINRICH KIPP WERK GmbH & Co. KG

Clamping force intensifiers

Drawings

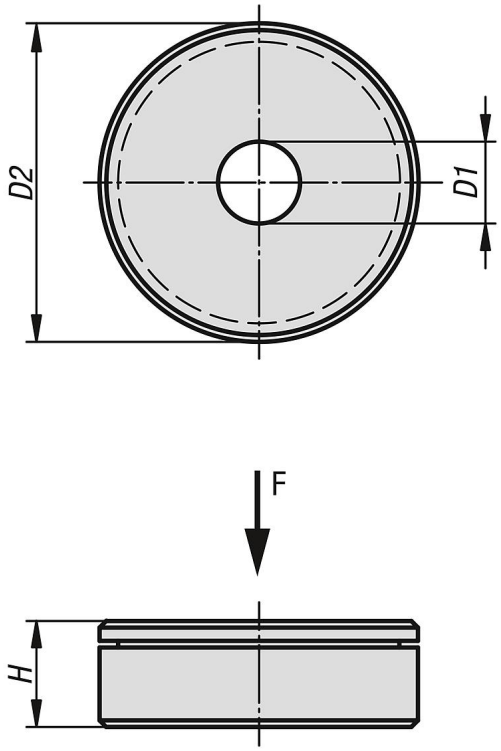

Overview of items

Clamping force intensifiers

Order No.	D1	D2	H	Dynamic load rating N	Static load rating N
K0584.06	6	24	8	6800	15500
K0584.08	8	25	8	7800	19400
K0584.10	10	30	8	9200	25500
K0584.12	12	35	8	9900	29000

© HEINRICH KIPP WERK GmbH & Co. KG