Grease nipples conical head DIN 71412

Item description/product images

Description

Material:
Steel or 1.4305 stainless steel.

Version:
Steel hardened, min. 550 HV 1, electro zinc-plated.
Stainless steel bright.

Note:
The conical head grease nipples have a tapered thread. They are suitable for grease points which must be lubricated often and reliably. Their versatility makes them the most widespread type of grease nipple.

Drawings

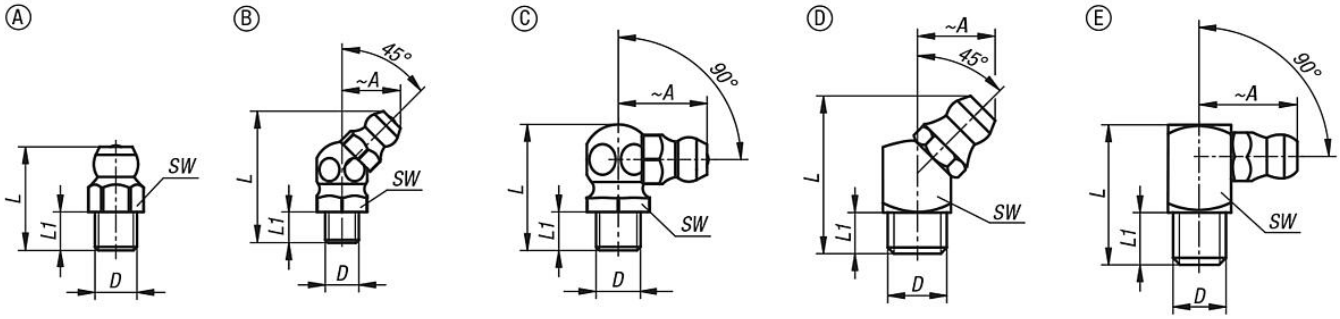

Overview of items

Order No.	Form	Form definition	Main material	A	D	L	L1	SW
K1132.1106100	A	straight with hexagon socket	steel	-	M6X1	-	6	7
K1132.1108100	A	straight with hexagon socket	steel	-	M8X1	-	6	9
K1132.1108125	A	straight with hexagon socket	steel	-	M8X1,25	-	6	9
K1132.1110100	A	straight with hexagon socket	steel	-	M10X1	-	6	11
K1132.1110150	A	straight with hexagon socket	steel	-	M10X1,5	-	6	11
K1132.1118	A	straight with hexagon socket	steel	-	R1/8	-	6	11
K1132.1114	A	straight with hexagon socket	steel	-	R1/4	-	6	14
K1132.2106100	A	straight with hexagon socket	stainless steel	-	M6X1	-	6	7
K1132.2108100	A	straight with hexagon socket	stainless steel	-	M8X1	-	6	9
K1132.2108125	A	straight with hexagon socket	stainless steel	-	M8X1,25	-	6	9
K1132.2110100	A	straight with hexagon socket	stainless steel	-	M10X1	-	6	11
K1132.2110150	A	straight with hexagon socket	stainless steel	-	M10X1,5	-	6	11
K1132.2118	A	straight with hexagon socket	stainless steel	-	R1/8	-	6	11
K1132.2114	A	straight with hexagon socket	stainless steel	-	R1/4	-	6	14
K1132.1206100	B	angled 45° with hexagon socket	steel	10,5	M6X1	-	5,5	9
K1132.1208100	B	angled 45° with hexagon socket	steel	10,5	M8X1	-	5,5	9
K1132.1208125	B	angled 45° with hexagon socket	steel	10,5	M8X1,25	-	5,5	9
K1132.1210100	B	angled 45° with hexagon socket	steel	11,5	M10X1	-	5,5	11
K1132.1210150	B	angled 45° with hexagon socket	steel	11,5	M10X1,5	-	5,5	11
K1132.1218	B	angled 45° with hexagon socket	steel	11,5	R1/8	-	5,5	11
K1132.1214	B	angled 45° with hexagon socket	steel	12	R1/4	-	5,5	14
K1132.2206100	B	angled 45° with hexagon socket	stainless steel	10,5	M6X1	-	5,5	9
K1132.2208100	B	angled 45° with hexagon socket	stainless steel	10,5	M8X1	-	5,5	9
K1132.2208125	B	angled 45° with hexagon socket	stainless steel	10,5	M8X1,25	-	5,5	9
K1132.2210100	B	angled 45° with hexagon socket	stainless steel	11,5	M10X1	-	5,5	11
K1132.2210150	B	angled 45° with hexagon socket	stainless steel	11,5	M10X1,5	-	5,5	11
K1132.2218	B	angled 45° with hexagon socket	stainless steel	11,5	R1/8	-	5,5	11
K1132.2214	B	angled 45° with hexagon socket	stainless steel	12	R1/4	-	5,5	14

© HEINRICH KIPP WERK GmbH & Co. KG

Grease nipples conical head DIN 71412

Overview of items

Order No.	Form	Form definition	Main material	A	D	L	L1	SW
K1132.1306100	C	angled 90° with hexagon socket	steel	13	M6X1	-	5,5	9
K1132.1308100	C	angled 90° with hexagon socket	steel	13	M8X1	-	5,5	9
K1132.1308125	C	angled 90° with hexagon socket	steel	12	M8X1,25	-	5,5	9
K1132.1310100	C	angled 90° with hexagon socket	steel	14	M10X1	-	5,5	11
K1132.1310150	C	angled 90° with hexagon socket	steel	14	M10X1,5	-	5,5	11
K1132.1318	C	angled 90° with hexagon socket	steel	14	R1/8	-	5,5	11
K1132.1314	C	angled 90° with hexagon socket	steel	14	R1/4	-	6	14
K1132.2306100	C	angled 90° with hexagon socket	stainless steel	13	M6X1	-	5,5	9
K1132.2308100	C	angled 90° with hexagon socket	stainless steel	13	M8X1	-	5,5	9
K1132.2308125	C	angled 90° with hexagon socket	stainless steel	13	M8X1,25	-	5,5	9
K1132.2310100	C	angled 90° with hexagon socket	stainless steel	14	M10X1	-	5,5	11
K1132.2310150	C	angled 90° with hexagon socket	stainless steel	14	M10X1,5	-	5,5	11
K1132.2318	C	angled 90° with hexagon socket	stainless steel	14	R1/8	-	5,5	11
K1132.2314	C	angled 90° with hexagon socket	stainless steel	14	R1/4	-	6	14
K1132.1406100	D	angled 45° with square	steel	10,5	M6X1	-	5,5	9
K1132.1408100	D	angled 45° with square	steel	10,5	M8X1	-	5,5	9
K1132.1408125	D	angled 45° with square	steel	10,5	M8X1,25	-	5,5	9
K1132.1410100	D	angled 45° with square	steel	11	M10X1	-	5,5	11
K1132.1418	D	angled 45° with square	steel	11	R1/8	-	5,5	11
K1132.1506100	E	angled 90° with square	steel	14	M6X1	-	5,5	9
K1132.1508100	E	angled 90° with square	steel	14	M8X1	-	5,5	9
K1132.1508125	E	angled 90° with square	steel	14	M8X1,25	-	5,5	9
K1132.1510100	E	angled 90° with square	steel	15	M10X1	-	5,5	11
K1132.1518	E	angled 90° with square	steel	15	R1/8	-	5,5	11

© HEINRICH KIPP WERK GmbH & Co. KG