Locating cylinders pneumatic

Item description/product images

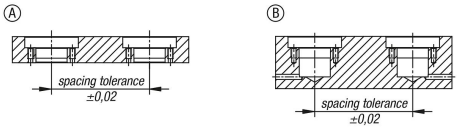

Description

Material:
Carbon steel.

Version:
nickel-plated.

Note:
The 3 clamping balls are released by applying compressed air.
The 3 clamping balls move inward and the fixture can be quickly changed. When the air pressure is removed, the 3 clamping balls move outwards and the fixture is clamped.
This easy-to-use system significantly reduces changeover times.

The repeat accuracy is ± 0.01 mm.

Accessory:
K1220 Locating bush for pneumatic locating cylinder.

Drawings

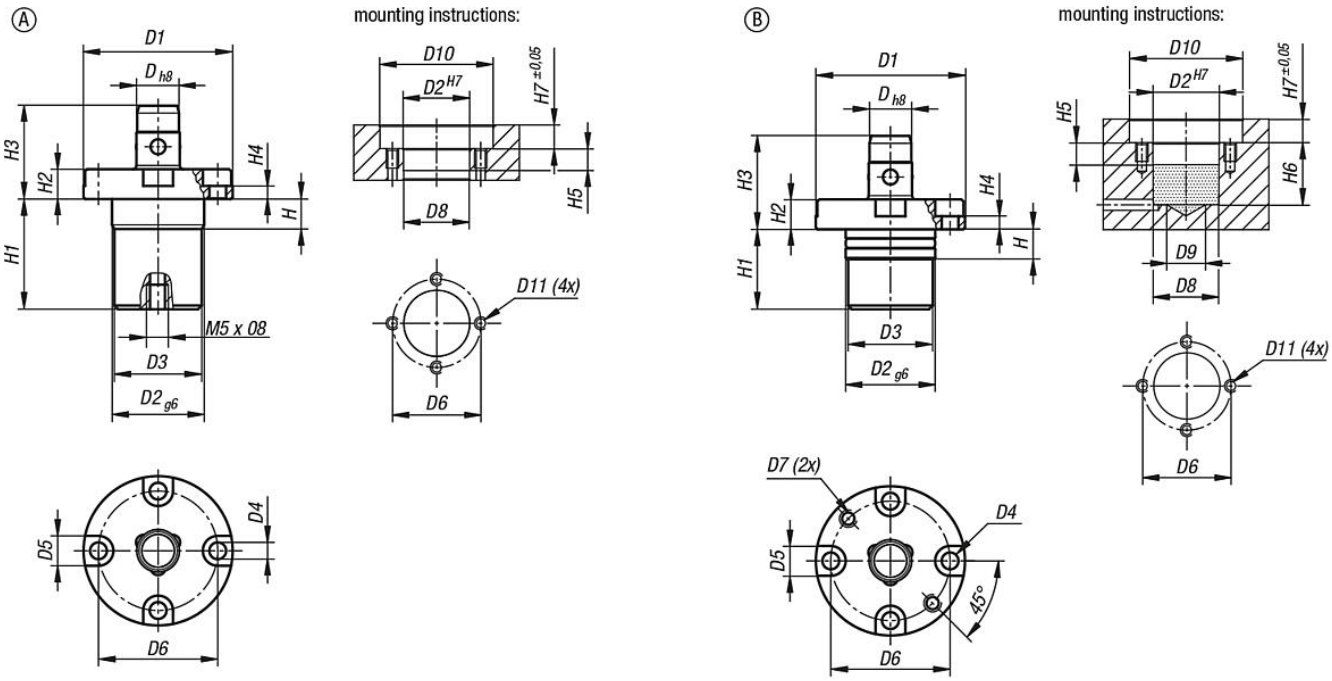

Overview of items

Locating cylinders pneumatic

Order No.	Form	D	D1	D2	D3	D4	D5	D6	D7	D8	D9	D10	D11	H	H1	H2	H3	H4	H5	H6	H7	Retaining force F1 N
K1219.112	A	12	40	24	23,4	4,5	8	32	-	23,8	-	41	M4	8	29,5	8	25	3,5	8,5	-	8,5	250
K1219.116	A	16	51	32	31,4	5,5	9,5	41	-	31,8	-	52	M5	8,5	31,7	9,5	28,5	4	9	-	10	350
K1219.212	B	12	40	24	23,4	4,5	8	32	M4	23,8	14	41	M4	8	24,5	8	25	3,5	8,5	25,5	8,5	250
K1219.216	B	16	51	32	31,4	5,5	9,5	41	M5	31,8	20	52	M5	8,5	25,5	9,5	28,5	4	9	26,5	10	350

© HEINRICH KIPP WERK GmbH & Co. KG

Overview of items