Swivel and fixed castors standard version

Item description/product images

Description

Material:
Housing steel plate.
Wheel treads solid rubber.
Wheel rims polyamide.

Version:
Housing press formed.
Double ball bearing in the castor head.
Plain bearing in wheels.

Note:
Wheel axle bolted.
Swivel and fixed castors with bolt hole.
Wheels grey, non-marking.

Drawings

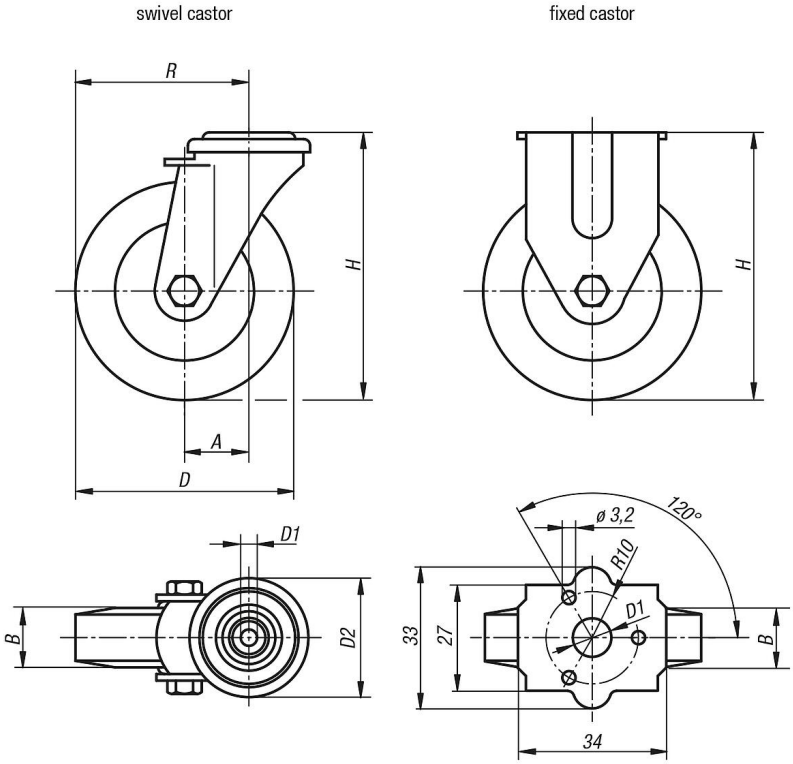

Swivel and fixed castors standard version

Drawings

swivel head bearing

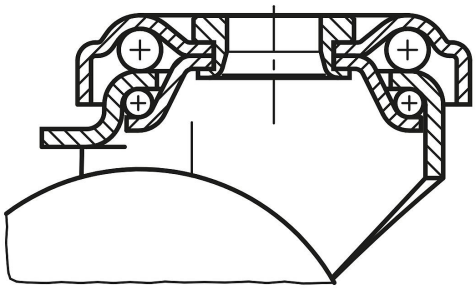

Overview of items

Swivel and fixed castors standard version

Order No.	Item	Version 1	Wheel bearing	A	B	D	D1	D2	H	R	Permissible load kg
K1759.050181	Fixed castor	without locking system	plain bearing	-	18	50	11	-	69	-	40
K1759.075251	Fixed castor	without locking system	plain bearing	-	25	75	11	-	98	-	60
K1759.05018	Swivel castor	without locking system	plain bearing	25	18	50	11	43	69	50	40
K1759.07525	Swivel castor	without locking system	plain bearing	28	25	75	11	43	98	65,5	60
K1759.10025	Swivel castor	without locking system	plain bearing	33	25	100	11	43	121	83	70
K1759.050182	Swivel castor	with stop-fix locking system	plain bearing	25	18	50	11	43	69	50	40
K1759.075252	Swivel castor	with stop-fix locking system	plain bearing	28	25	75	11	43	98	65,5	60
K1759.100252	Swivel castor	with stop-fix locking system	plain bearing	33	25	100	11	43	121	83	70

© HEINRICH KIPP WERK GmbH & Co. KG